Wiring Diagrams

Cable Codes

Audio & Cigar Lighter & Power Point Systems

Brake System

Central Locking System

Cluster & Information System

Cluster Connections

Engine Management 2- 1

Engine Management 2- 2

Heating System

Heating System w Wet Type Aux Heater - Heated Screen

Lighting, Illumination, Horn

Power Distribution B+ & Ignition Connections

Power Distribution Ground

Power Mirror System

Power Window System

Wiper Washer System

Design of Wiring System

Determine and Define of Wires

Circuit Numbers and Wire Identification will be done according the World-wide Engineering Drafting Standard WH-110-01. The circuit number is related to the electrical function and the component. The function portion of the circuit number is defined by the conditions under which a circuit has a particular voltage. The function number is based on the circuit's function, not on its source or destination.
Wire identification is essentially done by a basic colour which is assigned to the function of a wire.

Function Table:

No	Basic Colour	Description
4	GY (grey)	Data Bus (+), SCP +
5	BU (blue)	Data Bus (-), SCP -
7	YE (yellow)	Constant DC Voltage
8	WH (white)	Signal
9	BN (brown)	Signal Return
14	VT (violet)	Battery Voltage, Overload Protected Hot only in Start & Run
15	GN (green)	Battery Voltage, not Overload Protected Hot only in Start & Run
29	OG (orange)	Battery Voltage, Overload Protected Hot at all times
30	RD (red)	Battery Voltage, not Overload Protected Hot at all times
31	BK (black)	Ground
32	WH (white)	Switched battery voltage for: Close, Unlock, Forward, Leftward
33	YE (yellow)	Switched battery voltage for: Close, Lock, Reverse, Rightward
49	BU (blue)	Pulsed Power, Overload Protected
50	GY (grey)	Battery Voltage, not Overload Protected Hot only in Start
59	GY (grey)	AC power (Alternator output)
63	WH (white)	Variable DC, Overload Protected
64	BU (blue)	Variable DC, not Overload Protected
74	BU (blue)	Battery Voltage, Overload Protected Hot only in Run & Accessory

75	YE (yellow)	Battery Voltage, not Overload Protected Hot only in Run & Accessory
89	OG (orange)	Battery Voltage, Overload Protected Hot at all times, Clean Feed
90	RD (red)	Battery Voltage, not Overload Protected Hot at all times, Clean Feed
91	BK (black)	Ground, Clean Feed
94	VT (violet)	Battery Voltage, Overload Protected Hot only in Start & Run Clean Feed
95	GN (green)	Battery Voltage, not Overload Protected Hot only in Start & Run Clean Feed

LTRS	REVISIONS		
ORIGINATOR	CHECKER	ENGR APP	MATL A
HGULAY	NKELES	DHICKEY	

RIGHT SPEAKER

8-MD17 (14A584) WH-RD 1.50 14A584 14401

9-MD17 (14A584) BU-RD 1.50 14A584 14401

9-MD17 (14401) BU-RD 1.50

8-MD17 (14401) WH-RD 1.50

8-MD10 (14401) WH-BK 1.50

9-MD10 (14401) BN-YE 1.50

RADIO

RF- RF+ LF+ LF-

RADIO OUTPUT

RADIO INPUT

PWR MEM. PWR IGN. PWR GND.

LIGHTING&ILLUM.SYS. (FRONT FOG RELAY)

29-DA10 (14401) OG-BK 1.50

FUSE F20 10A

30-DA10C (14401) RD 2.50

VOLTAGE REGULATOR (KONVERTOR)

29-DA10A (14401) OG-BK 0.75

75-MD15 (14401) YE-GN 1.00

IGNITION SWITCH

29-MD1 (14401) OG-YE 1.00 S35 (14401) 29-AA4 (14401) OG-BU 2.50

30-AA12 (14401) RD 1.50

0123

0,1,2

S100 (14401) 30-BB9 (14401) RD 4.00

RD 6.00

S2 (14401) 30-DA1 (14401) RD 6.00 14401 14K012

30-DA20 (14K012) RD 6.00

30-DA19 (14K012) RD 10.00

S9 (14K012)

MAIN FUSE 60A

BATTERY GROUND

8-MD17 (14A584) WH-RD 1.50 14A584 14401

LEFT SPEAKER

9-MD17 (14A584) BU-RD 1.50 14A584 14401

POWER POINT

29-HA7 (14401) OG-BU 1.50

LIGHTING&ILLUM.SYS. HEATER PANEL ILLUM CONN.

29S-HA6 (14401) OG-YE 0.75

FUSE F14 10A

29-HA6 (14401) OG-YE 1.50

LIGHTING&ILLUM.SYS. SPLICE

29S-HA8 (14401) OG-OG 0.75

CIGARLIGHTER

30-DA21 (14K012) RD 6.00 14K012 14401 30-DA10 (14401) RD 6.00 S99 (14401) 30-KA2 (14401) RD 6.00 S33 (14401)

30-DA10D (14401) RD 2.50

REFERENCE	H476 9L CARGO TRUCK		
PART MUST COMPLY WITH RESTRICTED SUBSTANCE MANAGEMENT STANDARD WSS-M99P9999-A1 TO SAFEGUARD HEALTH, SAFETY AND THE ENVIRONMENT			
DRAFTED IN ACCORDANCE WITH FORD MOTOR COMPANY ENGINEERING CAD AND DRAFTING STANDARDS VERSION FECDS VERSION		3RD ANGLE PROJ DIMENSIONS ARE IN MILLIMETERS	
CAD TYPE	CAD LOC.	CAD FILE	DTMC IS MASTER
OPER. NO.	UNIT	DRAWING	
DESIGN NURSAN	DETAIL HGULAY	TITLE AUDIO_CIGARLIGHTER& POWER_POINT_SYSTEM	SHT OF 15
CHECKED NKELES	SAFETY		RH/LH SHOWN
SCALE	DATE 070118	DIVISION	
		PLANT GDLCUK	GSDB

FORD MOTOR COMPANY

LTRS	REVISIONS		
ORIGINATOR	CHECKER	ENGR APP	MATL APP
HGULAY	NKELES	DHICKEY	

14-MA10 (14401) VT-OG 0.75
FUSE F31 5A
14-MA8 (14401) VT 2.50
S48 14-MA6 (14401) VT-YE 2.50
15-MA6 (14401) GN-YE 2.50
ABS ASR MODUL
TO INFORMATION
8-EC9B (14401) WH 0.50
FUSE F29 15A
29-MA6 (14401) OG-YE 2.50
30-MA6 (14401) RD 4.00
S47 30-DA11 (14401) RD 6.00
14K012 –
TO ENGINE MANAGEMENT
8-EC9 (14K012) WH 0.75
S12 8-EC9A (14K012) WH 0.75
14K012 –
8-EC9 (14401) WH 0.75
31S-AA2 (14401) BK-BU 0.75
TO CLUSTER SYSTEM
33-AA6 (14401) YE 0.75
TO ENGINE MANAGEMENT
9-EC9 (14K012) BN 0.75
S13 9-EC9A (14K012) BN 0.75
14K012 –
9-EC9 (14401) BN 0.75
31S-AA12 (14401) BK-YE 0.75
31S-AA12A (14401) BK-YE 0.75
TO CLUSTER SYSTEM
9-PB9 (14401) BN-BU 1.00
TO INFORMATION
9-EC9B (14401) BN 0.50
ABS DIAGNOSTIC CONNECTOR
FUSE F30 10A
29-MA7A OG-BU 1.00
30-MA7 (14401) RD 4.00
ABS BLINK CODE BUTTON
RETARDER RELAY
FUSE F34 10A
14-PG1 (14401) VT-BU 2.50
FUSE F35 5A
IGNITION RELAY
VT-OG 1.00
GN-BU 1.50
FUSE F22 10A
GN-BU 2.50
31S-AA24 (14401) BK-YE 1.50
8-DA31 (14401) WH 1.00
ABS SW
FUSE F16 10A
FUSE F10 15A
GN 1.50
15-DB9 (14401) GN 4.00
S1 15-BB2 (14401) GN 2.50
IGNITION SWITCH
29S-AA24 (14401) OG-YE 0.75
31S-AA25 (14401) BK-BU 1.50
S51 29S-BB8 (14401) OG 1.00
S23 29S-BB5 (14401) OG-BU 1.50
FUSE F4 10A
29S-WA7 (14401) OG-WH 2.50
LAMP SW (LIGHTING SYSTEM)
FUSE F5 10A
OG-WH 1.00
ASR SW
29S-AA25 (14401) OG-BU 0.75
S100 30-BB9 (14401) RD 4.00
RD 6.00
S2
30-DA1 (14401) RD 6.00
14K012 –
30-DA20 (14K012) RD 6.00
S9
30-DA19 (14K012) RD 10.00
MAIN FUSE 60A
30-DA13 (14K012) RD 6.00
S3
30-DA23 (14K012) RD 6.00
BATTERY
MAIN FUSE 60A
30-DA22 (14K012) RD 6.00
14K012 –
30-DA10 (14401) RD 6.00
S99
15-PG1 (14401) GN-BU 2.50
GROUND
30-BB10 (14401) RD 6.00
S40
15-DB10 (14401) GN-BK 6.00
15-CF18 (14401) GN-YE 2.50
30-DA22 (14K012) RD 6.00
14K012 –
30-CF2 (14401) RD 6.00
TRAILER ABS CONNECTOR
TO CLUSTER
14401 –
14-WC70 (14405) VT-BK 0.75
14-WC70 (14401) VT-BK 0.75
29-CF1 (14405) OG-BU 6.00
14401 –
29-CF2 (14401) OG-BU 6.00
FUSE F32 25A
14-CF19 (14405) VT-BU 1.50
14401 –
14-CF18 (14401) VT-YE 2.50
FUSE F33 5A
14S-HA3 (14401) VT-BU 1.00
RETARDER SW
RETARDER POWER BOX
RETARDER UNIT
14S-HB5 (14401) VT-BU 1.00
14401 –
14S-HB5 (14405) VT-BU 1.00
14S-LE10 (14401) VT-OG 1.00
14401 –
14S-LE10 (14405) VT-OG 1.00
14S-AC1 (14401) VT-BU 1.00
14401 –
14S-AC1 (14405) VT-BU 1.00
14S-AG2 (14401) VT-BU 1.00
14401 –
14S-AG2 (14405) VT-BU 1.00
32-AA1 (14405) WH-RD 10.00
32-BA1 (14405) WH-RD 10.00
32-CA1 (14405) WH-RD 10.00
32-DA23 (14405) WH-RD 10.00
14S-LG7 (14405) VT-BU 1.00
S2 (14405)
14S-LG14 (14405) VT 2.50
TO LIGHTING SYSTEM (BRAKE LIGHT SIGNAL)
TO CLUSTER
31S-BA7 (14401) BK-BU 0.75
14401 –
31S-BA7 (14405) BK-BU 0.75

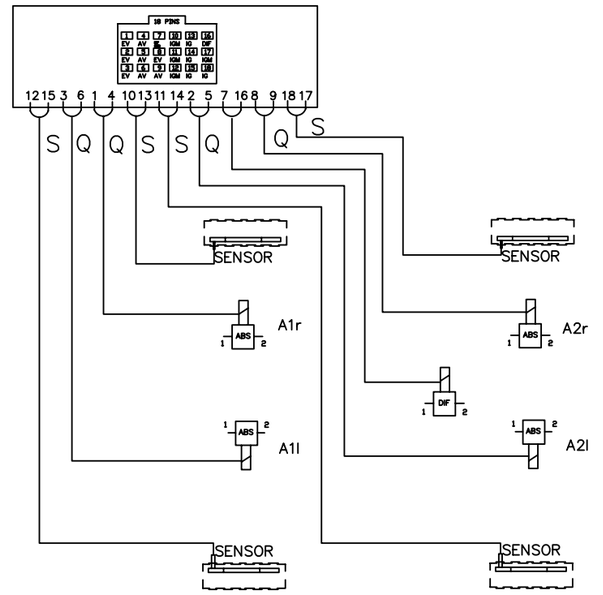

REFERENCE	H476 9L CARGO TRUCK		
PART MUST COMPLY WITH RESTRICTED SUBSTANCE MANAGEMENT STANDARD WSS-M99P9999-A1 TO SAFEGUARD HEALTH, SAFETY AND THE ENVIRONMENT			
DRAFTED IN ACCORDANCE WITH FORD MOTOR COMPANY ENGINEERING CAD AND DRAFTING STANDARDS VERSION FECDS VERSION		3RD ANGLE PROJ	DIMENSIONS ARE IN MILLIMETERS
CAD TYPE	CAD LOC.	CAD FILE	DTMC IS MASTER
OPER. NO.	UNIT	DRAWING	
DESIGN NURSAN	DETAIL	TITLE: BRAKE SYSTEM	SHT OF 7
CHECKED NKELES	SAFETY		RH/LH SHOWN
SCALE	DATE 061108	DIVISION	
		PLANT GOLCUK	GSDB

FORD MOTOR COMPANY

LTRS	REVISIONS		
ORIGINATOR	CHECKER	ENGR APP	MATL A
HGULAY	NKELES	DHICKEY	

14401 14A584 32-AA15 (14A584) WH-GN 0.75
14401 14A584 33-AA16 (14A584) YE-BK 0.75
14401 14A584 32-AA16 (14A584) WH-BK 0.75

DOOR LOCKING MECHANISM (LEFT)

M

14K012 14401 30-DA10 (14401) RD 6.00 S99 (14401) 30-KA2 (14401) RD 6.00 S33 (14401)

30-DA21 (14K012) RD 6.00 S9 (14K012) 30-DA19 (14K012) RD 10.00

MAIN FUSE 60A

BATTERY

GROUND

14401 14A584 33-AA35 (14A584) YE-VT 0.75

33-AA45 (14401) YE-RD 0.75
32-AA45 (14401) WH-RD 0.75
32-AA33 (14401) WH 0.75
33-AA11 (14401) YE-VT 0.75
30-HB17 (14401) RD 2.50

CENTRAL LOCKING MODUL

1 49S-LG10 (14401) BU-YE 0.75
2 49S-LG17 (14401) BU-OG 0.75
3 32-AA53 (14401) WH-RD 0.75
4 33-AA53 (14401) YE-RD 0.75
5
6 29-AA17 (14401) OG-WH 0.75
7
8 33-AA17 (14401) YE-VT 0.75
9 32-AA17 (14401) WH-VT 0.75
10 91-AA17 (14401) BK-WH 0.75

LIGHTING&ILLUM SYS. FLASHER SPLICE

CODE LEARN

S41 (14401)
S42 (14401)
S43 (14401)
S44 (14401)

FUSE F26 10A

RD 2.50

FUSE F27 10A

29-HB17 (14401) OG-WH 1.50

COUNTER HEATER MIRROR RELAY

33-AA16 (14401) YE-BK 0.75
32-AA15 (14401) WH-GN 0.75
32-AA16 (14401) WH-BK 0.75
33-AA35 (14401) YE-VT 0.75

14401 14A584 32-AA15 (14A584) WH-GN 0.75
14401 14A584 33-AA16 (14A584) YE-BK 0.75
14401 14A584 32-AA16 (14A584) WH-BK 0.75

DOOR LOCKING MECHANISM (RIGHT)

M

14401 14A584 33-AA35 (14A584) YE-VT 0.75

REFERENCE	H476 9L CARGO TRUCK		
PART MUST COMPLY WITH RESTRICTED SUBSTANCE MANAGEMENT STANDARD WSS-M99P9999-A1 TO SAFEGUARD HEALTH, SAFETY AND THE ENVIRONMENT			
DRAFTED IN ACCORDANCE WITH FORD MOTOR COMPANY ENGINEERING CAD AND DRAFTING STANDARDS VERSION FECDS VERSION		3RD ANGLE PROJ DIMENSIONS ARE IN MILLIMETERS	
CAD TYPE	CAD LOC.	CAD FILE	DTMC IS MASTER
OPER. NO.	UNIT	DRAWING	
DESIGN NURSAN	DETAIL HGULAY	TITLE CENTRAL_LOCKING SYSTEM	SHT OF 10
CHECKED NKELES	SAFETY		RH/LH SHOWN
SCALE	DATE 070117	DIVISION	
		PLANT GDLCUK	GSDB

FORD MOTOR COMPANY

LTRS	REVISIONS			
ORIGINATOR	CHECKER	ENGR APP	MATL	A
HGULAY	NKELES	DHICKEY		

IGNITION RELAY
FUSE F35
FUSE F22
BODY LOCK TEST SW
BODY LOCK SW2
BODY LOCK SW1
TO LIGHTING SYSTEM
FUEL TANK SENDER
IGNITION SWITCH
FUSE F16
FUSE F10
FUSE F1
DATA LINK CONNECTOR
ABS
CLUSTER BLUE CONNECTOR
TO LIGHTING SYSTEM
TO REAR FOG SW (LIGHTING SYSTEM)
TO ENGINE MANAGEMENT
VEHICLE SPEED SENSOR
TACHOGRAPH
MAIN FUSE 60A
BATTERY
GROUND
FUSE F18 3A
FUSE F1
TO ENGINE MANAGEMENT
AIR PRESSURE SENSOR 1
AIR PRESSURE SENSOR 2
TO LIGHTING SYSTEM (STOP RELAY)
AIR SUSPENSION MODUL
FUSE F28 5A
CONTROL PANEL POWER
FUSE F36 5A
ENGINE COOLANT LEVEL WARNING
COOL.WAT. TANK
BODY LOCK TEST SW
TO ABS DIAGNOSTIC CONNECTOR
FUSE F30 10A
TO ENGINE MANAGEMENT
MIL LAMP
TO TRAILER ABS
EXTERNAL TEMPERATURE SENSOR
BRAKE PAD WEAR SENSOR
BRAKE FLUID PRESSURE SENSOR
FUSE F11
FUSE F12
TO STOP LAMP SW (LIGHTING SYSTEM)
TO CHARGING SYSTEM
CHARGING BUZZER
TO RETARDER
TO DIFFRENTIAL LOCKING SW (ABS SYSTEM)
TO ABS ASR MODULE
FUSE F39 10A
FUEL FILTER HEATER
AIR FILTER POLUTION SENSOR
WATER IN FUEL SENSOR
TO FRONT FOG SW (LIGHTING SYSTEM)

REFERENCE
PART MUST COMPLY WITH RESTRICTED SUBSTANCE MANAGEMENT STANDARD WSS-M99P9999-A1 TO SAFEGUARD HEALTH, SAFETY AND THE ENVIRONMENT
DRAFTED IN ACCORDANCE WITH FORD MOTOR COMPANY ENGINEERING CAD AND DRAFTING STANDARDS VERSION FECDS VERSION
3RD ANGLE PROJ
DIMENSIONS ARE IN MILLIMETERS

CAD TYPE	CAD LOC.	CAD FILE	DTNC IS MASTER
OPER. NO.	UNIT	DRAWING	
DESIGN NURSAN	DETAIL	TITLE	SHT OF 5
CHECKED NKELES	SAFETY	CLUSTER_&_INFORMATION SYSTEM	RH/LH SHOWN
SCALE	DATE 061102	DIVISION	
		PLANT GDLCUK	GSDB

FORD MOTOR COMPANY

IC CONNECTORS

Input	Output
Input / Output	Power

Left side — CON1 — 966658-1 green female

Wire current		CON1 1	CON1 17		Wire Current
	Battery Ground	●	●	Battery Power	715 mA at 28,8V
125mA	*Oil Pressure Warning signal	▶	◀	*Oil Change Warning Signal	125 mA
125mA	*High Coolant Warning signal	▶	◀	*Fuel Pre heater Signal	125 mA
125mA	*Engine Check Warning Signal(-)	▶	◀	ECU Led power	500 mA
125mA	Engine Check Power(+)		◀	Gear Selector State	2 mA max
2 mA max	Air suspension level signal	▶	◀	ECAS Signal	2 mA max
2 mA max	Trailer ABS	▶	◀	Blocked fuel filter Signal	2 mA max
2 mA	External temperature Ground	●	◀	interlock Signal	2 mA max
2 mA	External temperature Signal	▶	◀	Pad wear Signal	2 mA max
2 mA max	Park brake Indication Signal	▶	◀	lifted axleSignal	2 mA max
2 mA max	Alternator indication Signal	▶	◀	Low pressure steering signal	2 mA max
2 mA max	Retarder signal	▶	◀	Traction help Signal	2 mA max
2 mA max	Differential lock Signal	▶	◀	Second Differential lock Signal	2 mA max
2 mA max	Water in fuel Signal	▶	◀	ASR Signal	2 mA max
2 mA max	Blocked Air Filter Signal	▶	◀	Low coolant level	2 mA max
2 mA max	ABS signal	▶	◀	Front fog	2 mA max
		16	32		

Right Side — CON2 — 966658-2 blue female

		CON2 1	CON2 17		
2 mA max	Truck direction right signal	▶	◀	Truck direction left signal	2 mA max
2 mA max	High Beam Signal	▶	◀	Position lamps signal	2 mA max
2 mA max	Cabine Lock Signal	▶	◀	Rear fog Signal	2 mA max
2 mA max	Ignition Signal	▶	◀	Diagnostic tester ready signal	2 mA max
16 mA	Fuel level Ground	●	◀	Trailer direction left signal	2 mA max
16 mA	Fuel Level Signal	▶	◀	Trailer direction right signal	2 mA max
	Battery Ground	●	◀	K line Signal	See Kline Spec
See CAN Spec	CAN bus High	▶	●	K line Ground	See Kline Spec
See CAN Spec	CAN bus Low	▶	●	CAN bus shield	0 mA
1 mA max	Vehicle speed Signal	▶	●	Vehicle speed Ground	
2 mA max	Oil Pressure PWM signal	▶	●	speedometer Signal 2 shield	0 mA
	speedometer Signal 2 Ground	●		speedometer Signal 2 signal	28 mA max
	speedometer Signal 1 Ground	●		speedometer Signal 1 signal	28 mA max
4 mA max	Air Pressure 1 Signal	▶	◀	Air Pressure 2 Signal	4 mA max
4 mA max	Air Pressure 1 Ground	●	●	Air Pressure 2 Ground	4 mA max
4 mA max	Air Pressure 1 Power	●	●	Air Pressure 2 Power	4 mA max
		16	32		

ENGINE MANAGEMENT (2/1)
ECU VEHICLE & STARTING AND CHARGING SYSTEMS CONNECTIONS

LTRS	REVISIONS		
ORIGINATOR	CHECKER	ENGR APP	MAT'L APP
GKARALLI	MARIOZ	DHICKEY	

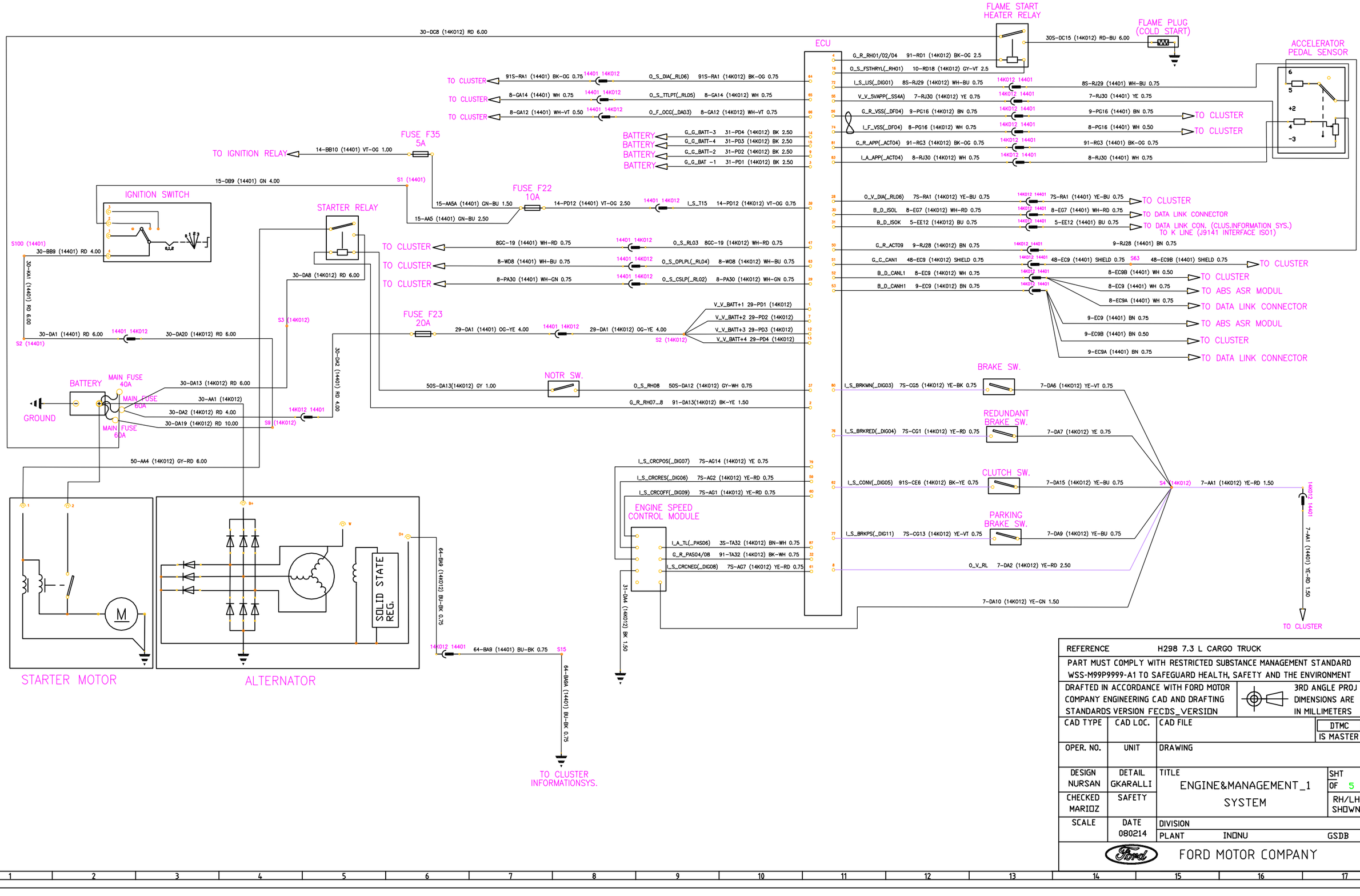

REFERENCE	H298 7.3 L CARGO TRUCK		
PART MUST COMPLY WITH RESTRICTED SUBSTANCE MANAGEMENT STANDARD WSS-M99P9999-A1 TO SAFEGUARD HEALTH, SAFETY AND THE ENVIRONMENT			
DRAFTED IN ACCORDANCE WITH FORD MOTOR COMPANY ENGINEERING CAD AND DRAFTING STANDARDS VERSION FECDS_VERSION		3RD ANGLE PROJ DIMENSIONS ARE IN MILLIMETERS	
CAD TYPE	CAD LOC.	CAD FILE	DTMC IS MASTER
OPER. NO.	UNIT	DRAWING	
DESIGN NURSAN	DETAIL GKARALLI	TITLE ENGINE&MANAGEMENT_1 SYSTEM	SHT OF 5
CHECKED MARIOZ	SAFETY		RH/LH SHOWN
SCALE	DATE 080214	DIVISION	
		PLANT INONU	GSDB
FORD MOTOR COMPANY			

ENGINE MANAGEMENT (2/2)
(ECU SENSORS AND INJECTOR CONNECTIONS)

LTRS	REVISIONS		
ORIGINATOR	CHECKER	ENGR APP	MATL APP
GKARALLI	MARIOZ	DHICKEY	

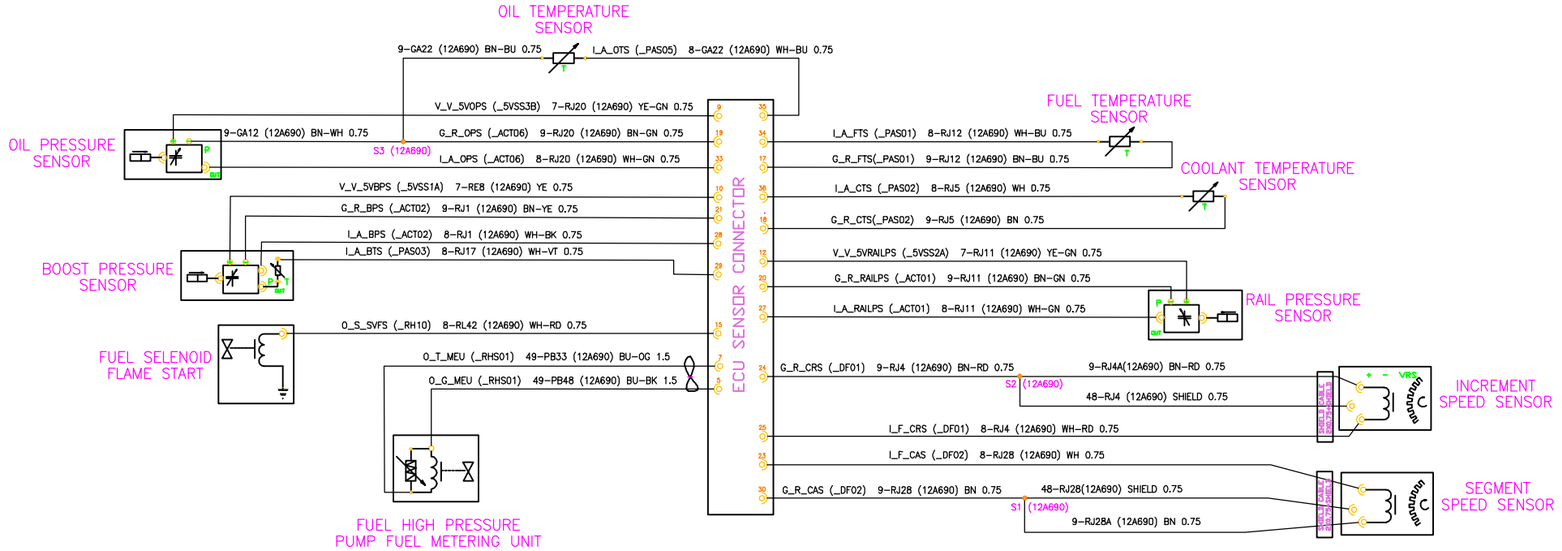

REFERENCE	H298 7.3L CARGO TRUCK		
PART MUST COMPLY WITH RESTRICTED SUBSTANCE MANAGEMENT STANDARD WSS-M99P9999-A1 TO SAFEGUARD HEALTH, SAFETY AND THE ENVIRONMENT			
DRAFTED IN ACCORDANCE WITH FORD MOTOR COMPANY ENGINEERING CAD AND DRAFTING STANDARDS VERSION FECDS VERSION		3RD ANGLE PROJ DIMENSIONS ARE IN MILLIMETERS	
CAD TYPE	CAD LOC.	CAD FILE	DTMC IS MASTER
OPER. NO.	UNIT	DRAWING	
DESIGN NURSAN	DETAIL GKARALLI	TITLE ENGINE_MANAGEMENT(2/2) SYSTEMS	SHT SHT OF 6
CHECKED MARIOZ	SAFETY		RH/LH SHOWN
SCALE	DATE 080215	DIVISION	
		PLANT INONU	GSDB

FORD MOTOR COMPANY

LTRS	REVISIONS		
ORIGINATOR	CHECKER	ENGR APP	MATL A
HGULAY	NKELES	DHICKEY	

EBERSPACHER SW

7-AJ6 (14401) YE 0.75

29-DA15 (14401) OG 0.75

FUSE F43
5A

30-DA10F (14401) RD 1.00

EBERSPACHER UNIT

EBERSPACHER
FUEL PUMP

10-HA12 (14401) GY-RD 0.75

3-HA13 (14401) BN-WH 0.75

15-HA15 (14405) GN-RD 1.00

14405 14401

15-HA15 (14401) GN-RD 1.00

S99 (14401) 30-KA2 (14401) RD 6.00

S33 (14401) 30-DA10A (14401) RD 4.00

29-DA16 (14401) OG-BK 2.50

FUSE F21
15A

FUSE F16
10A

GN-BU 1.50

FUSE F10
15A

15-DB9 (14401) GN 4.00

S1 (14401)

15-BB2 (14401) GN 2.50

GN 1.50

IGNITION SWITCH

FUSE F11
10A

GN-BU

FUSE F12
15A

GN-BU

FUSE F39
10A

14-HA1 (14401) VT-BU 1.50

HEATER BLOWER MOTOR

14S-HB18 (14401) VT-YE 1.50

14S-HB28 (14401) VT-OG 1.50

14S-HB23 (14401) VT-WH 1.50

0 1 2 3

0,1,2,3

HEATER BLOWER
MOTOR SW

30-BB9 (14401) RD 4.00

S100 (14401)

RD 6.00

S2 (14401) 30-DA1 (14401) RD 6.00

14K012

30-DA20 (14K012) RD 6.00

S9 (14K012) 30-DA19 (14K012) RD 10.00

MAIN FUSE
60A

30-DA10 (14401) RD 6.00

14401 14K012

30-DA21 (14K012) RD 6.00

BATTERY

GROUND

REFERENCE	H476 9L CARGO TRUCK		
PART MUST COMPLY WITH RESTRICTED SUBSTANCE MANAGEMENT STANDARD WSS-M99P9999-A1 TO SAFEGUARD HEALTH, SAFETY AND THE ENVIRONMENT			
DRAFTED IN ACCORDANCE WITH FORD MOTOR COMPANY ENGINEERING CAD AND DRAFTING STANDARDS VERSION FECDS VERSION		3RD ANGLE PROJ DIMENSIONS ARE IN MILLIMETERS	
CAD TYPE	CAD LOC.	CAD FILE	DTMC IS MASTER
OPER. NO.	UNIT	DRAWING	
DESIGN NURSAN	DETAIL HGULAY	TITLE HEATING SYSTEM	SHT OF 12
CHECKED NKELES	SAFETY		RH/LH SHOWN
SCALE	DATE 070117	DIVISION	
		PLANT GDLCUK	GSDB

FORD MOTOR COMPANY

LTRS	REVISIONS		
ORIGINATOR	CHECKER	ENGR APP	MATL APP
GKARALLI	MARIOZ	DHICKEY	

HEATED WINDOW SW.

HEATED FRONT WIN. TIMER RELAY

HEATED FRONT RELAY

30-HB2 (14401) RD 10.00 — 14401 14K012

31S-HB14 (14401) BK-OG 0.75

30S-HB18 (14401)

29S-HB7 (14401) S51 (14401)

FUSE F44 5A

30-8 / 54-8 / 31 / 15 / 31B-15

14-HB12 (14401) VT-YE 0.75 — S48 (14401)

31S-HB9 (14401) BK-WH 1.5

15-HB13 (14401) GN-BU 6.00

15-HB10 (14401) GN-BK 10.00 — S62 (14401)

15-HB11 (14401) GN-OG 6.00 — FUSE F41 30A — 30-HB25 (14401) RD 4.00 — TO HEATER WDSCR.

15-HB12 (14401) GN-YE 6.00 — FUSE F42 30A — 30-HB26 (14401) RD 4.00 — TO HEATER

HEATED SEAT

14-HC18 (14401) VT-BK 1.00 — FUSE F38 5A — 15-HC18 (14401) GN-BK 1.00 S40 (14401)

WEBASTO UNIT

5-HA6 (14401) BU 0.75

WEBASTO SW.

1-HA6 (14401) WH 0.75

33-HA17 (14401) YE-BK 0.75

30-HA1 (14401) RD 0.75

AIR CONDITION

29S-LG32 (14401) OG-YE 1.50

FUEL LINE HEATER

29S-LG31 (14401) OG-YE 1.50 S31 (14401)

HEATER BLOWER MOTOR

14S-HB18 (14401) VT-YE 1.50

14S-HB28 (14401) VT-OG 1.50

14S-HB23 (14401) VT-WH 1.50

M

0 1 2 3

0,1,2,3

HEATER BLOWER MOTOR SW

14-HA2 (14401) VT-BU 1.50

AUX. HEATER

14-HA1B (14401) VT-BU 1.50

14-HA1C (14401) VT-BU 1.50

14-HA1D (14401) VT-BU 1.50

14-HA1 (14401) VT-BU 1.50

S65 (14401) 14-HA1A (14401) VT-BU 1.50

30-DA10A (14401) RD 2.50 — FUSE F21 10A — 29-DA16 (14401) OG-BK 2.50

FUEL LINE HEATER SW.

30-KA2 (14401) RD 6.00

S99 (14401) S33 (14401)

30-DA17 (14401) RD 6.00 — TO (+) CABLE POINT

30-BB10 (14401) RD 6.00 — TO POWER DIST. (+) IGNITION RELAY

GN-BU 1.50 — FUSE F16 10A

GN 1.50 — FUSE F10 15A

15-DB9 (14401) GN 4.00 — S1 (14401) — 15-BB2 (14401) GN 2.50

IGNITION SWITCH

FUSE F11 10A

GN-BU — FUSE F12 15A

GN-BU — FUSE F39 10A

0123

0,1,2

30-BB9 (14401) RD 4.00

S100 (14401)

RD 6.00

S2 (14401) 30-DA1 (14401) RD 6.00 — 14401 14K012 — 30-DA20 (14K012) RD 6.00 — S9 (14K012) 30-DA19 (14K012) RD 10.00

30-DA10 (14401) RD 6.00 — 14401 14K012 — 30-DA21 (14K012) RD 6.00

MAIN FUSE 60A

BATTERY

GROUND

30-HB2 (14K012) RD 10.00

REFERENCE	H206 7.3L CARGO TRUCK		
PART MUST COMPLY WITH RESTRICTED SUBSTANCE MANAGEMENT STANDARD WSS-M99P9999-A1 TO SAFEGUARD HEALTH, SAFETY AND THE ENVIRONMENT			
DRAFTED IN ACCORDANCE WITH FORD MOTOR COMPANY ENGINEERING CAD AND DRAFTING STANDARDS VERSION FECDS_VERSION		3RD ANGLE PROJ	DIMENSIONS ARE IN MILLIMETERS
CAD TYPE	CAD LOC.	CAD FILE	DTMC IS MASTER
OPER. NO.	UNIT	DRAWING	
DESIGN NURSAN	DETAIL GKARALLI	TITLE HEATING_SYS.W/WET_TYPE AUX_HEATER&HEATED_SCREEN	SHT OF 4
CHECKED MARIOZ	SAFETY		RH/LH SHOWN
SCALE	DATE 080208	DIVISION	
		PLANT INDNU	GSDB

FORD MOTOR COMPANY

LTRS	REVISIONS			
ORIGINATOR	CHECKER	ENGR APP	MATL APP	
HGULAY	NKELES	DHICKEY		

RH HIGH BEAM
RH LOW BEAM
RH SIGNAL LAMP
RH PARKING LAMP
TO POWER MIRROR ILLUMINATION
HEATER PANEL ILLUM. CONNECTOR
24V/12V REGULATOR
TO 12V POWER POINT ILLUM.
RH DOME LAMP
RH HORN
RH FRONT FOG LAMP
SIDE MARKER LAMP
RH HEADLAMP LEVELING MOTOR
LH HEADLAMP LEVELING MOTOR
LF HORN
SIDE MARKER LAMP
LH FRONT FOG LAMP
LH DOME LAMP
LH HIGH BEAM
LH LOW BEAM
LH SIGNAL LAMP
LH PARKING LAMP

FUSE F7 10A
FUSE F3 10A
HIGH BEAM RELAY
FUSE F13 10A
FUSE F6 10A
FUSE F2 10A
TO CLUSTER
TO ABS SW ILLUM. (BRAKE SYS.)
TO ASR SW ILLUM. (BRAKE SYS.)
TO TEST SW ILLUM.
TO DIAGNOSTIC REQUEST SW ILLUM.
TO DRV.SIDE FRONT WINDOW MOTOR SW. ILLUM.
TO RIGHT FRONT WINDOW MOTOR SW. ILLUM.
TO POWER MIRROR SW. ILLUM.
LOW BEAM RELAY
TO VOLTAJ REGULATOR (AUDIO SYSTEM)
FUSE F15 10A
FUSE F20 10A
FRONT FOG RELAY
FUSE F16 10A
FUSE F10 15A
IGNITION SWITCH
MAIN FUSE 60A
MAIN FUSE 60A
BATTERY
GROUND
HEADLAMP LEVELING SW
FUSE F5 10A
CONSOLE LAMP
FLASHER SW
TO CENTRAL LOCKING MODULE
TO CENTRAL LOCKING MODULE

READING LAMP1
READING LAMP2
TO INFORMATION SYSTEM (IGNITION FEED SPLICE)
STOP LAMP SW
STOP LAMP RELAY
TO RETARDER BRAKE SYSTEM
LH DOOR SW
RH DOOR SW
REAR FOG RELAY
FUSE F19 10A
REAR FOG SW
TO CLUSTER
REAR FOG SW OPEN WARN. BUZZER
FRONT FOG SW
TO CLUSTER
FUSE F17 10A
MULTI FUNCTIONAL SW
SIGNAL SW
HORN
DIMMER SW
FUSE F4 10A
LIGHT
BACKUP LAMP SW
FUSE F8 10A
FUSE F9 10A
TO TAG AXLE SW ILLUM.
TO AXLE LIFTING SW ILLUM.
TO CIGARLIGHTER ILLUM.
TO DIFFERANTIAL LOCK SW ILLUM.
FLASHER RELAY
LICENCE PLATE LAMP
RIGHT REAR
LEFT REAR
STOP
SIGNAL
BACKUP LAMP
PARK
FOG
LICENCE PLATE LAMP

REFERENCE	H476 9L CARGO TRUCK
PART MUST COMPLY WITH RESTRICTED SUBSTANCE MANAGEMENT STANDARD WSS-M99P9999-A1 TO SAFEGUARD HEALTH, SAFETY AND THE ENVIRONMENT	
DRAFTED IN ACCORDANCE WITH FORD MOTOR COMPANY ENGINEERING CAD AND DRAFTING STANDARDS VERSION FECDS VERSION	3RD ANGLE PROJ DIMENSIONS ARE IN MILLIMETERS

CAD TYPE	CAD LOC.	CAD FILE	DTMC IS MASTER
OPER. NO.	UNIT	DRAWING	
DESIGN NURSAN	DETAIL HGULAY	TITLE: LIGHTING&ILLUMUNATION& HORN_SYSTEMS	SHT OF 8
CHECKED NKELES	SAFETY		RH/LH SHOWN
SCALE	DATE 061116	DIVISION	
		PLANT GOLCUK	GSDB

FORD MOTOR COMPANY

LTRS	REVISIONS		
ORIGINATOR	CHECKER	ENGR APP	MATL APP
GKARALLI	MARIOZ	DHICKEY	

ALTERNATOR

IGNITION RELAY

IGNITION SWITCH

BATTERY

GROUND

FUSE F35 5A

FUSE F22 10A

FUSE F37 10A

FUSE F16 10A

FUSE F10 15A

FUSE F11 10A

FUSE F12 15A

FUSE F39 10A

FUSE F9 10A

FUSE F8 10A

FUSE F38 5A

FUSE F31 5A

FUSE F33 5A

FUSE F34 10A

FUSE F28 5A

FUSE F25 10A

FUSE F24 20A

FUSE F26 10A

FUSE F27 10A

FUSE F14 10A

FUSE F21 15A

FUSE F43 5A

FUSE F20 10A

FUSE F32 25A

FUSE F30 10A

FUSE F29 15A

FUSE F1 10A

FUSE F18 3A

FUSE F23 30A

MAIN FUSE 60A

MAIN FUSE 40A

MAIN FUSE 60A

MAIN FUSE 30A

TO CENTRAL LOCKING MODUL

HEATER MIRROR COUNTER RELAY

CIGARLIGHTER

TO HEATING SYS. EBERSPACHER UNIT

TO HEATING SYS. EBERSPACHER SW.

LIGHTING&ILLUM. SYS. HIGH BEAM RELAY

LIGHTING&ILLUM. SYS. LOW BEAM RELAY

LIGHTING&ILLUM. SYS. FRONT FOG RELAY

AUDIO SYS.

VOLTAJ REGULATOR

CAB TILTING RELAY

TO PTO

TO CLUSTER INFORMATION SYS. TACHOGRAPH

TO CAB TILTING RELAY

TO HEATER MIRROR COUNTER RELAY

BRAKE SYS. RETARDER RELAY

BRAKE SYS. ABS ASR MODUL

HEATED SEAT

TO BRAKE SYS. TRAILER ABS CONN.

TO BRAKE SYS. RETARDER RELAY

CLUSTER&INFORMATION SYS. AIR SUSPENSION MODUL

TO CLUSTER&INFORMATION SYS. CONTROL PANEL POWER

POWER MIRROR SW.

RIGHT FRONT WINDOW MOTOR SW.

DRV.SIDE FRONT WINDOW MOTOR SW.

ENGINE MANAGEMENT (2/1) SYS. ECU

WORKING LAMP

WASHER/WIPER MOTOR

DIFF. LOCK SW.

WASHER/WIPER SW.

LIGHTING&ILLUM. SYS. STOP LAMP SW.

CLUSTER&INFORMATION SYS. CHARGING BUZZER

CLUSTER&INFORMATION SYS. ENGINE COOLANT LEVEL WARN.

HEATER BLOWER SW.

CLUSTER&INFORMATION SYS. WATER IN FUEL SENSOR

CLUSTER&INFORMATION SYS. FUEL FILTER HEATER

TO LIGHTING&ILLUM.SYS. HEDLAMP SW.

TO LIGHTING&ILLUM.SYS. REAR LAMP SW.

TO LIGHTING&ILLUM.SYS. FRONT LAMP SW.

TO LIGHTING&ILLUM. SYS. LIGHT SW.

LIGHTING&ILLUM. SYS. MULTI FUNCTIONAL SW. (DIMMER SW.)

TO LIGHTING&ILLUM. SYS. FRONT FOG SW.

LIGHTING&ILLUM. SYS. MULTI FUNCTIONAL SW. (HORN SW.)

LIGHTING&ILLUM. SYS. FLASHER SW.

BRAKE SYS. TRAILER ABS CONNECTOR

CLUSTER&INFORMATION SYS. CLUSTER GREEN CONN.

BRAKE SYS. ABS DIAGNOSTIC CONN.

BRAKE SYS. ABS ASR MODUL

ENGINE MANAGEMENT (2/1) SYS. STARTER MOTOR RELAY

ENGINE MANAGEMENT (2/1) SYS. FLAME START HEATER RELAY

CLUTCH SW. RELAY

CLUTCH SW.

TO BACK GEAR SW.

TO DIFF LOCK SW.

LIGHTING&ILLUM. SYS. REAR FOG SW. OPEN WARN BUZZER

TO CLUSTER&INFORMATION SYS. CLUSTER BLUE CONN.

CLUSTER&INFORMATION SYS. AIR PRESS. SENSOR 2

CLUSTER&INFORMATION SYS. AIR PRESS. SENSOR 1

TO 16_SPEED_TRANS_SYS. TAG AXLE FITTING SW.

AIR DRYER RELAY

TO 16_SPEED_TRANS_SYS. ADDITIONAL AXLE LIFTING BRING DOWN SW.

CLUSTER&INFORMATION SYS. DATA LINK CONN.

LIGHTING&ILLUM. SYS. FLASHER SW.

LIGHTING&ILLUM. SYS. CONSOLE LAMP

LIGHTING&ILLUM. SYS. READING LAMP2

LIGHTING&ILLUM. SYS. READING LAMP1

LIGHTING&ILLUM. SYS. REAR FOG SW.

LIGHTING&ILLUM. SYS. READING LAMP

K LINE

CLUSTER&INFORMATION SYS. TAKOGRAF

LIGHTING&ILLUM. SYS. REAR FOG RELAY

LIGHTING&ILLUM. SYS. STOP RELAY

AIR DRYER RELAY

TO LIGHTING&ILLUM.SYS. LIGHT BUR

TO LIGHTING&ILLUM.SYS. HEDLAMP RELAY

TO LIGHTING&ILLUM.SYS. REAR LAMP RELAY

TO LIGHTING&ILLUM.SYS. FRONT LAMP RELAY

REFERENCE	H298 7.3L CARGO TRUCK		
PART MUST COMPLY WITH RESTRICTED SUBSTANCE MANAGEMENT STANDARD WSS-M99P9999-A1 TO SAFEGUARD HEALTH, SAFETY AND THE ENVIRONMENT			
DRAFTED IN ACCORDANCE WITH FORD MOTOR COMPANY ENGINEERING CAD AND DRAFTING STANDARDS VERSION FECDS_VERSION		3RD ANGLE PROJ DIMENSIONS ARE IN MILLIMETERS	
CAD TYPE	CAD LOC.	CAD FILE	DTMC IS MASTER
OPER. NO.	UNIT	DRAWING	
DESIGN NURSAN	DETAIL GKARALLI	TITLE	SHT OF 3
CHECKED MARIOZ	SAFETY	POWER_DISTRIBUTION B+_&_IGNITION_CONNECTIONS	RH/LH SHOWN
SCALE	DATE 080206	DIVISION	
		PLANT INONU	GSDB

FORD MOTOR COMPANY

LTRS	REVISIONS		
ORIGINATOR	CHECKER	ENGR APP	MATL APP
GKARALLI	MARIDZ	DHICKEY	

CLUSTER SYSTEM FUEL FILTER HEATER — 31-DA3 (14K012) BK 2.50
ENGINE MANAGEMENT SYS. MOTOR SPEED CONTROL UNIT — 31-DA4 (14K012) BK 1.50
CLUSTER SYSTEM WATER IN FUEL SENSOR — 31-AA1 (14K012) BK 0.75
AIR DRYER — 31-PA23 (14K012) BK 1.50
CLUSTER SYSTEM AIR FILTER POLITION SENSOR — 31-GC26 (14K012) BK 0.75
31-DA1 (14K012) BK 6.00 — S10 (14K012)
14K012 14401 — 31-DA1 (14401) BK 6.00
31-DA2 (14K012) BK 4.00
31-PG10 (14K012) BK 10.00 — S1 (14K012)
ENGINE MANAGEMENT SYS. ECU — 31-PD1 (14K012) BK 2.50; 31-PD2 (14K012) BK 2.50; 31-PD3 (14K012) BK 2.50; 31-PD4 (14K012) BK 2.50
31-PG1 (14K012) BK 10.00
TO 14K012 ALTERNATOR GROUND
(TO 14K012) CHASIS GROUND
TO CHASIS GROUND
BATTERY

14401 14A584 — 31-AA1 (14A584) BK 1.50 — S2 (14A584)
31-AA2 (14A584) BK 0.75 — RH FRONT DOOR LOCK MOTOR
31-AA3 (14A584) BK 0.75
31-AA4 (14A584) BK 0.75 — POWER MIRROR SYS. RIGHT MIRROR UNIT

31-AA1 (14401) BK 2.50
31-AD12 (14401) BK 1.00 — LIGHTING&ILLUM SYS. POWER MIRROR SW ILLUM.
31-AJ26 (14401) BK 1.50 — LIGHTING&ILLUM SYS. DRV.SIDE FRONT WINDOW SW ILLUM.
31-HC1 (14401) BK 1.50 — HEATING MOTOR
31-LB31 (14401) BK 2.50 — 14401 14334 — 31-LB31 (14334) BK 2.50 — S6 (14334)
31-LE8 (14401) BK 1.50 — CLUTCH SW RELAY
S28 (14401) — 31-BB10 (14401) BK 1.00 — IGNITION RELAY
31-AA5 (14401) BK 6.00

31-BA10 (14401) BK 1.00 — AUDIO SYSTEM VOLTAJ REGULATOR
31-BA16 (14401) BK 0.75 — LIGHTING&ILLUM SYS. FLASHER RELAY
31-BA6 (14401) BK 1.50 — WASHER WIPER
31-BA5 (14401) BK 1.50 — LIGHTING&ILLUM SYS. REAR FOG RELAY
31-BA4 (14401) BK 0.75 — LIGHTING&ILLUM SYS. FRONT FOG RELAY
31-BA1E (14401) BK 1.00 — CLUSTER&INFORM. SYS. ENGINE COOL.LEVEL WARN.
31-BA1 (14401) BK 2.50 — S34 (14401)
31-BA2 (14401) BK 2.50 — LIGHTING&ILLUM SYS. LOW BEAM RELAY
31-BA3 (14401) BK 1.50 — LIGHTING&ILLUM SYS. HIGH BEAM RELAY

31-LB15 (14334) BK 0.75 — READING LAMP
31-LB14 (14334) BK 0.75
31-LB3 (14334) BK 0.75 — LIGHTING&ILLUM SYS. READING LAMP1
31-LB4 (14334) BK 0.75 — LIGHTING&ILLUM SYS. LH DOME LAMP
31-LB5 (14334) BK 0.75
31-LB7 (14334) BK 0.75 — LIGHTING&ILLUM SYS. READING LAMP2
31-LB10 (14334) BK 0.75 — LIGHTING&ILLUM SYS. RH DOME LAMP
S2 (14334) — 31-LB8 (14334) BK 0.75
31-LB11 (14334) BK 0.75 — LIGHTING&ILLUM SYS. CONSOLE LAMP
31-LB12 (14334) BK 0.75 — TO TACHOGRAPH
31-LB12A (14334) BK 0.75
31-LB1 (14334) BK 1.50

31-BA10A (14401) BK 4.00 — CLUSTER&INFORMATION SYS. DATA LINK CONN.
31-BA10 (14401) BK 0.75

12V CIGARLIGHTER — 31-HA7 (14401) BK 1.50
CLUSTER&INFORMATION SYS. CLUSTER BLUE CONN. — 31-PB10 (14401) BK 0.75
CLUSTER&INFORMATION SYS. CLUSTER GREEN CONN. — 31-WC2 (14401) BK 0.75
CLUSTER&INFORMATION SYS. DATA LINK CONN. — 31-PB9 (14401) BK 0.75
CLUSTER&INFORMATION SYS. EXTERNAL TEMP. SENSOR — 31-WC2A (14401) BK 0.75
31-AA1 (14401) BK 2.50 — S20 (14401)
31-AA4 (14401) BK 4.00

LIGHTING&ILLUM SYS. FLASHER SW. — 31-LC10 (14401) BK 0.75
LIGHTING&ILLUM SYS. FRONT FOG SW. — 31-LA41 (14401) BK 0.75
LIGHTING&ILLUM SYS. 24/12V REGULATOR RELAY — 31-HC1B (14401) BK 0.75
CIGARLIGHTER — 31-HA6 (14401) BK 1.50
CLUSTER&INFORMATION SYS. CLUSTER GREEN CONN. — 31-BB20 (14401) BK 0.75
CLUSTER&INFORMATION SYS. CLUSTER BLUE CONN. — 31-WC11 (14401) BK 0.75
AXLE LIFTING SW. — 31-CE5 (14401) BK 0.75
TO CLUSTER INFORMATION SYS. AIR SUSPENSION MODULE — 31-CD2 (14401) BK 1.50
CLUSTER&INFORMATION SYS. CONTROL PANEL POWER — 31-CD1 (14401) BK 0.75
DIFF.LOCK SW. — 31-BB17 (14401) BK 0.75
31-AA1 (14401) BK 2.50 — S22 (14401)
31-AA1 (14401) BK 2.50

31-MD1 (14401) BK 1.00 — RADIO
31-PF14 (14401) BK 0.75 — AIR DRYER RELAY
31-WA10 (14401) BK 0.75 — LIGHTING&ILLUM SYS. REAR FOG SW.

31-WC10A (14401) BK 0.75
31-WC10 (14401) BK 0.75 — CLUSTER&INFORMATION SYS. CLUSTER BLUE CONN.
31-WC8 (14401) BK 0.75
31-AA2 (14A584) BK 0.75 — CENTRAL LOCKING SYS. LH FRONT DOOR LOCK MOTOR
31-AA3 (14A584) BK 0.75
31-AA4 (14A584) BK 0.75 — POWER MIRROR SYS. LEFT MIRROR UNIT
31-AA12 (14401) BK 1.50 — 14401 14A584 — 31-AA1 (14A584) BK 1.50 — S2 (14A584)
S29 (14401)
31-AC8 (14401) BK 0.75 — LIGHTING&ILLUM SYS. HEADLAMP LEVELING SW

31-AA16 (14401) BK 2.50 — S24 (14401)
31-AC7 (14401) BK 0.75 — LIGHTING&ILLUM SYS. RH HEADLAMP LEVELING MOTOR
31-LD12 (14401) BK 1.50 — LIGHTING&ILLUM SYS. RH FRONT FOG LAMP
31-LE22 (14401) BK 1.50 — LIGHTING&ILLUM SYS. RH HIGH BEAM LAMP
31-LE30 (14401) BK 1.50 — LIGHTING&ILLUM SYS. RH LOW BEAM LAMP
31-LE16 (14401) BK 0.75 — LIGHTING&ILLUM SYS. RH PARKING LAMP
31-LG21 (14401) BK 0.75 — LIGHTING&ILLUM SYS. RH SIGNAL LAMP

LIGHTING&ILLUM SYS. LH HEADLAMP LEVELING MOTOR — 31-AC6 (14401) BK 0.75
LIGHTING&ILLUM SYS. LH FRONT FOG LAMP — 31-LD11 (14401) BK 1.50
LIGHTING&ILLUM SYS. LH HIGH BEAM LAMP — 31-LE17 (14401) BK 1.50
LIGHTING&ILLUM SYS. LH LOW BEAM LAMP — 31-LE31 (14401) BK 1.50
LIGHTING&ILLUM SYS. LH PARKING LAMP — 31-LF7 (14401) BK 0.75
LIGHTING&ILLUM SYS. LH SIGNAL LAMP — 31-LG11 (14401) BK 0.75
31-AA8 (14401) BK 2.50 — S26 (14401)

31-HA17 (14405) BK 1.00 — TO HEATING SYS. FUEL PUMP
31-AA18 (14405) BK 1.50 — TO 16_SPEED_TRANS TAG_AXLE&DIFF.LOCK SYS. TAG AXLE FITTING VALVE
31-LA14 (14405) BK 1.00 — LIGHTING&ILLUM SYS. LEFT REAR LAMPS
31-LA18 (14405) BK 1.00 — LIGHTING&ILLUM SYS. RIGHT REAR LAMPS
31-LA75 (14405) BK 1.50 — TRAILER CONNECTION
31-LF19 (14405) BK 1.50 — SIDE MARKER LAMP
31-LF52 (14405) BK 1.50 — SIDE MARKER LAMP
31-DA31 (14405) BK 1.00 — TO 16_SPEED_TRANS TAG_AXLE&DIFF.LOCK SYS. DIFF.LOCK VALVE
S6 (14405) — 31-LA9 (14400) BK 2.50
S9 (14405) — 31-AA2 (14405) BK 6.00 — BRAKE SYS. TRAILER ABS CONN.
31-AA3 (14405) BK 1.50
31-LA1 (14405) BK 0.75 — CLUSTER&INF. SYS. BODY LOCK SW.
31-AA1 (14400) BK 6.00
31-DA2 (14400) BK 4.00
S1 — 31-AA1 (14A005) BK 1.50 — TO LIGHTING&ILLUM. SYS. HEADLAMP RELAY
31-AA1A (14A005) BK 1.50 — TO LIGHTING&ILLUM. SYS. REAR LAMP RELAY
31-AA1B (14A005) BK 1.50 — TO LIGHTING&ILLUM. SYS. FRONT LAMP RELAY
31-AA11A (14A005) BK 1.00 — 14A005 14405 — 31-AA11 (14405) BK 1.00 — TO LIGHTING&ILLUM. SYS. FRONT PARKING LAMP
31-AA12 (14A005) BK 1.00 — 14A005 14405 — 31-AA12 (14405) BK 1.00 — TO LIGHTING&ILLUM. SYS. REAR PARKING LAMP
31-HB1B (14A005) BK 0.75 — TO LIGHTING&ILLUM. SYS. HEADLAMP SW.
31-HB18B (14A005) BK 0.75 — TO LIGHTING&ILLUM. SYS. REAR LAMP SW.
31-HB18A (14A005) BK 0.75 — TO LIGHTING&ILLUM. SYS. FRONT LAMP SW.
31-LE1A (14A005) BK 1.50 — 14A005 14405 — 31-LE1A (14405) BK 1.50 — TO LIGHTING&ILLUM. SYS. REAR LAMP
31-LE1B (14A005) BK 1.50 — 14A005 14405 — 31-LE1 (14405) BK 1.50 — TO LIGHTING&ILLUM. SYS. FRONT LAMP
31-LE31 (14A005) BK 1.50 — TO LIGHTING&ILLUM. SYS. HEADLAMP
31-DA1 (14A005) BK 4.00
(TO 14A005) LIGHT BUR GROUND
(TO 14A005) GROUND
(TO 14405) GROUND

ASR SW — 31-AA23 (14401) BK 1.50
ABS SW — 31-AA25 (14401) BK 0.75
31-AA24 (14401) BK 0.75
31-AA22 (14401) BK 1.50 — S52 (14401)
31-LA32 (14401) BK 0.75 — LIGHTING&ILLUM SYS. HEATER PANEL ILLUM.CONN.
31-AJ18 (14401) BK 0.75 — RIGHT FRONT WINDOW MOTOR SW.
31-AJ7 (14401) BK 0.75 — DRV.SIDE FRONT WINDOW MOTOR SW.

TAG AXLE FITTING SW — 31-LG6A (14401) BK 0.75
LIGHTING&ILLUM SYS. STOP LAMP RELAY — 31-LG6 (14401) BK 0.75
HEATED SEAT — 31-HC19 (14401) BK 1.00
EBERSPACHER UNIT — 31-HC12 (14401) BK 2.50
POWER MIRROR SW — 31-HB18 (14401) BK 0.75
COUNTER ISITICI AYNA RELAY — 31-HB17 (14401) BK 0.75
EBERSPACHER SW — 31-HA18 (14401) BK 0.75
31-DA40 (14401) BK 2.50 — S49 (14401)
31-AA36 (14401) BK 2.50 — S21 (14401)
31-WC5 BK 0.75 — PTO
31-AA36A (14401) BK 1.50
31-AA36B (14401) BK 1.50 — BRAKE SYS. ABS-ASR MODUL
31-DA11 (14401) BK 2.50

BRAKE SYSTEM ABS BLINK CODE BUTTON — 31-AA51 (14401) BK 1.50
BRAKE SYSTEM ABS DIAGNOSTIC CONN. — 31-AA50 (14401) BK 1.00
BRAKE SYSTEM ABS ASR MODUL — 31-AA38 (14401) BK 2.50
31-AA37 (14401) BK 2.50
31-DA21 (14401) BK 4.00
(TO 14401) CABIN GROUNDING POINT RH

CAM YIKAMA MOTORU — 31-AK1 (14401) BK 1.00
WASHER WIPER MOTOR — 31-AK10 (14401) BK 1.50
LIGHTING&ILLUM SYS. RH SIDE MARKER LAMP — 31-LG20 (14401) BK 0.75
LIGHTING&ILLUM SYS. RH HORN — 31-WE6 (14401) BK 1.00
31-AA7 (14401) BK 2.50 — S25 (14401)
LIGHTING&ILLUM SYS. LH SIDE MARKER LAMP — 31-LG13 (14401) BK 0.75
LIGHTING&ILLUM SYS. LH HORN — 31-WE7 (14401) BK 1.00
CLUSTER&INFORMATION SYS. AIR PRESS. SENSOR 2 — 31-WC4 (14401) BK 0.75
CLUSTER&INFORMATION SYS. AIR PRESS. SENSOR 1 — 31-WC7 (14401) BK 0.75
CLUSTER VALVE — 31-LE7 (14401) BK 1.00
31-AA8 (14401) BK 1.50 — S27 (14401)
31-AA10 (14401) BK 4.00

31-KA7 (14401) BK 1.00 — DEGAS BOTTLE WARNING
31-AM6 (14401) BK 1.50 — K LINE
31-AA13 (14401) BK 0.75
31-AA14 (14401) BK 0.75 — TO CENTRAL LOCKING MODUL
31-AJ17 (14401) BK 1.50 — RIGHT FRONT WINDOW MOTOR SW.
S30 (14401)

REFERENCE	H296 7.3L CARGO TRUCK DOUBLE CAB		
PART MUST COMPLY WITH RESTRICTED SUBSTANCE MANAGEMENT STANDARD WSS-M99P9999-A1 TO SAFEGUARD HEALTH, SAFETY AND THE ENVIRONMENT			
DRAFTED IN ACCORDANCE WITH FORD MOTOR COMPANY ENGINEERING CAD AND DRAFTING STANDARDS VERSION FECDS_VERSION		3RD ANGLE PROJ DIMENSIONS ARE IN MILLIMETERS	
CAD TYPE	CAD LOC.	CAD FILE	DTNC IS MASTER
OPER. NO.	UNIT	DRAWING	
DESIGN NURSAN	DETAIL GKARALLI	TITLE: POWER_DISTRUBITION GROUND	SHT OF 2
CHECKED MARIDZ	SAFETY		RH/LH SHOWN
SCALE	DATE 080205	DIVISION	
		PLANT INONU	GSDB
FORD MOTOR COMPANY			

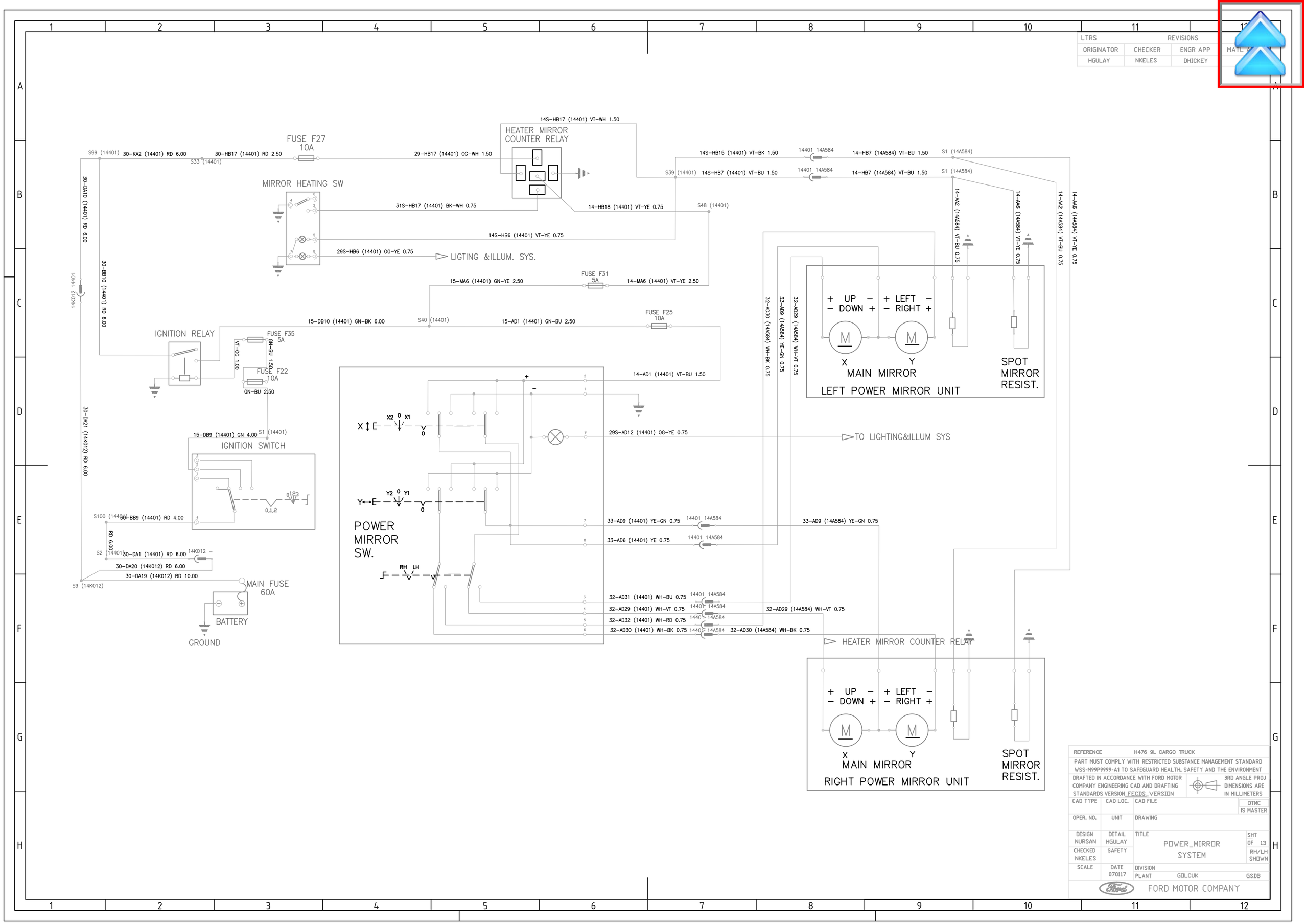

LTRS
REVISIONS
ORIGINATOR
CHECKER
ENGR APP
HGULAY
NKELES
DHICKEY
HEATER MIRROR COUNTER RELAY
FUSE F27 10A
MIRROR HEATING SW
LIGTING &ILLUM. SYS.
FUSE F31 5A
FUSE F25 10A
IGNITION RELAY
FUSE F35 5A
FUSE F22 10A
IGNITION SWITCH
POWER MIRROR SW.
TO LIGHTING&ILLUM SYS
MAIN FUSE 60A
BATTERY
GROUND
+ UP − + LEFT −
− DOWN + − RIGHT +
MAIN MIRROR
SPOT MIRROR RESIST.
LEFT POWER MIRROR UNIT
RIGHT POWER MIRROR UNIT
REFERENCE H476 9L CARGO TRUCK
PART MUST COMPLY WITH RESTRICTED SUBSTANCE MANAGEMENT STANDARD WSS-M99P9999-A1 TO SAFEGUARD HEALTH, SAFETY AND THE ENVIRONMENT
DRAFTED IN ACCORDANCE WITH FORD MOTOR COMPANY ENGINEERING CAD AND DRAFTING STANDARDS VERSION FECDS VERSION
3RD ANGLE PROJ DIMENSIONS ARE IN MILLIMETERS
CAD TYPE
CAD LOC.
CAD FILE
DTMC IS MASTER
OPER. NO.
UNIT
DRAWING
DESIGN NURSAN
DETAIL HGULAY
CHECKED NKELES
SAFETY
TITLE POWER_MIRROR SYSTEM
SHT OF 13
RH/LH SHOWN
SCALE
DATE 070117
DIVISION
PLANT GOLCUK GSDB
FORD MOTOR COMPANY

LTRS	REVISIONS		
ORIGINATOR	CHECKER	ENGR APP	MATL A
HGULAY	NKELES	DHICKEY	

15-DB10 (14401) GN-BK 6.00 — S40 (14401) — 15-AJ1 (14401) GN-BU 2.50

FUSE F24 20A

FUSE F44 10A

GN-OG

14-AJ1 (14401) VT-BU 2.50

FUSE F35 5A

IGNITION RELAY

30-BB10 (14401) RD 6.00 — S99 (14401)

VT-OG 1.00

GN-BU 1.50

FUSE F22 10A

GN-BU 2.50

30-DA10 (14401) RD 6.00

14-AJ26 (14401) VT-YE 1.50 — S45 (14401) — 14-AJ17 (14401) VT-WH 1.50

WINDOW ADJUST SW (LEFT)

WINDOW ADJUST SW (RIGHT)

15-DB9 (14401) GN 4.00 — S1 (14401)

IGNITION SWITCH

0123

0,1,2

14K012 14401

30-DA21 (14K012) RD 6.00

S100 (14401) 30-BB9 (14401) RD 4.00

RD 6.00

30-DA1 (14401) RD 6.00 — 14K012 — 30-DA20 (14K012) RD 6.00

S2 (14401)

30-DA19 (14K012) RD 10.00

S9 (14K012)

MAIN FUSE 60A

BATTERY

GROUND

32-AJ26 (14401) WH 1.50 — 14401 14A584 — 32-AJ26 (14A584) WH 1.50

33-AJ26 (14401) YE 1.50 — 14401 14A584 — 33-AJ26 (14A584) YE 1.50

29S-AJ26 (14401) OG-YE 0.75

29S-AJ17 (14401) OG-WH 0.75

LIGTING&ILLUM SYS.

32-AJ17 (14401) WH-VT 1.50 — 14401 14A584 — 32-AJ17 (14A584) WH-VT 1.50

33-AJ17 (14401) YE-VT 1.50 — 14401 14A584 — 33-AJ17 (14A584) YE-VT 1.50

– UP +
+ DOWN –

M

WINDOW MOTOR (LEFT)

WINDOW MOTOR (RIGHT)

REFERENCE	H476 9L CARGO TRUCK		
PART MUST COMPLY WITH RESTRICTED SUBSTANCE MANAGEMENT STANDARD WSS-M99P9999-A1 TO SAFEGUARD HEALTH, SAFETY AND THE ENVIRONMENT			
DRAFTED IN ACCORDANCE WITH FORD MOTOR COMPANY ENGINEERING CAD AND DRAFTING STANDARDS VERSION FECDS VERSION		3RD ANGLE PROJ	DIMENSIONS ARE IN MILLIMETERS
CAD TYPE	CAD LOC.	CAD FILE	DTMC IS MASTER
OPER. NO.	UNIT	DRAWING	
DESIGN NURSAN	DETAIL HGULAY	TITLE POWER_WINDOWS SYSTEM	SHT OF 11
CHECKED NKELES	SAFETY		RH/LH SHOWN
SCALE	DATE 070117	DIVISION	
		PLANT GDLCUK	GSDB

FORD MOTOR COMPANY

LTRS	REVISIONS			
ORIGINATOR	CHECKER	ENGR APP	MA'L AP	
HGULAY	NKELES	DHICKEY		

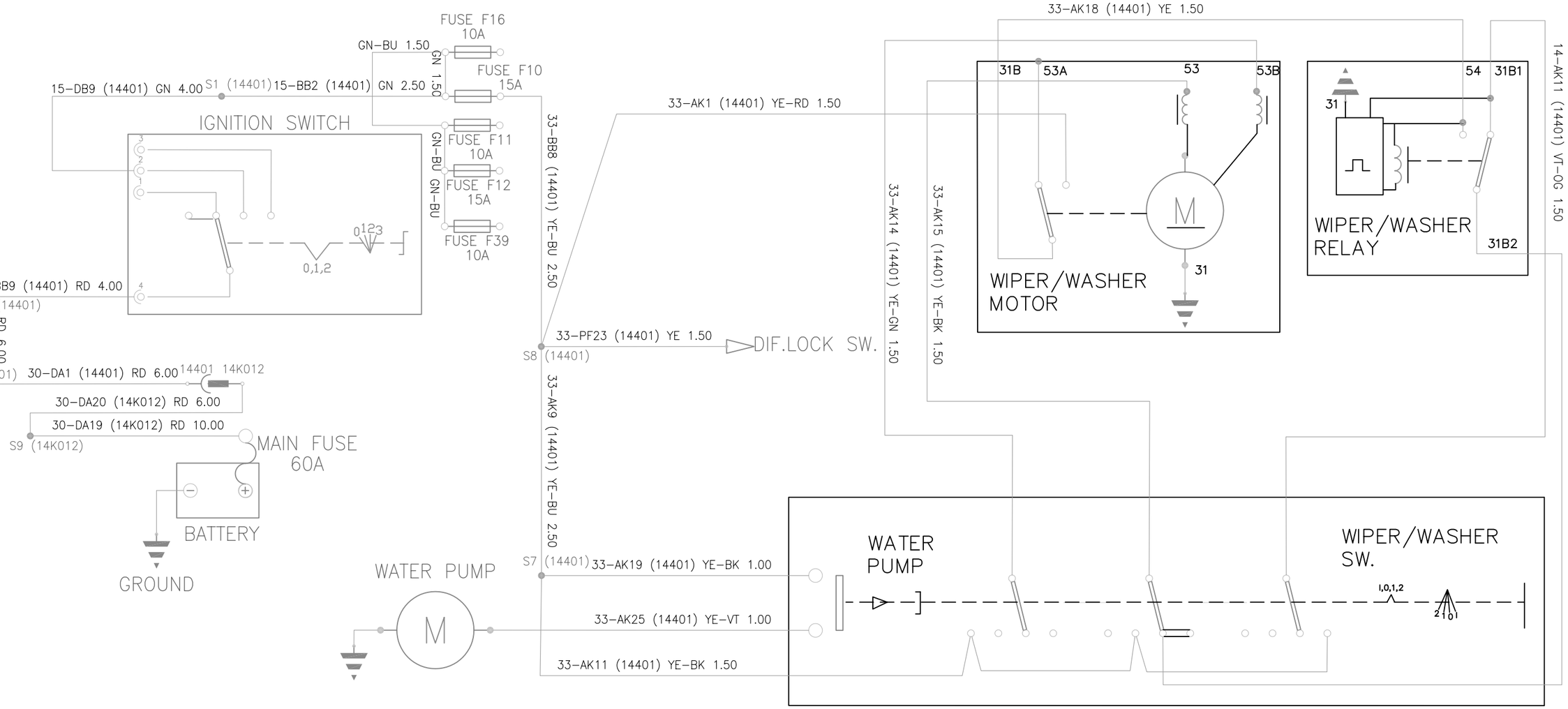

REFERENCE	H476 9L CARGO TRUCK		
PART MUST COMPLY WITH RESTRICTED SUBSTANCE MANAGEMENT STANDARD WSS-M99P9999-A1 TO SAFEGUARD HEALTH, SAFETY AND THE ENVIRONMENT			
DRAFTED IN ACCORDANCE WITH FORD MOTOR COMPANY ENGINEERING CAD AND DRAFTING STANDARDS VERSION FECDS VERSION		3RD ANGLE PROJ DIMENSIONS ARE IN MILLIMETERS	
CAD TYPE	CAD LOC.	CAD FILE	DTMC IS MASTER
OPER. NO.	UNIT	DRAWING	
DESIGN NURSAN	DETAIL HGULAY	TITLE WIPER_WASHER SYSTEM	SHT OF 14
CHECKED NKELES	SAFETY		RH/LH SHOWN
SCALE	DATE 070117	DIVISION	
		PLANT GOLCUK	GSDB
FORD MOTOR COMPANY			

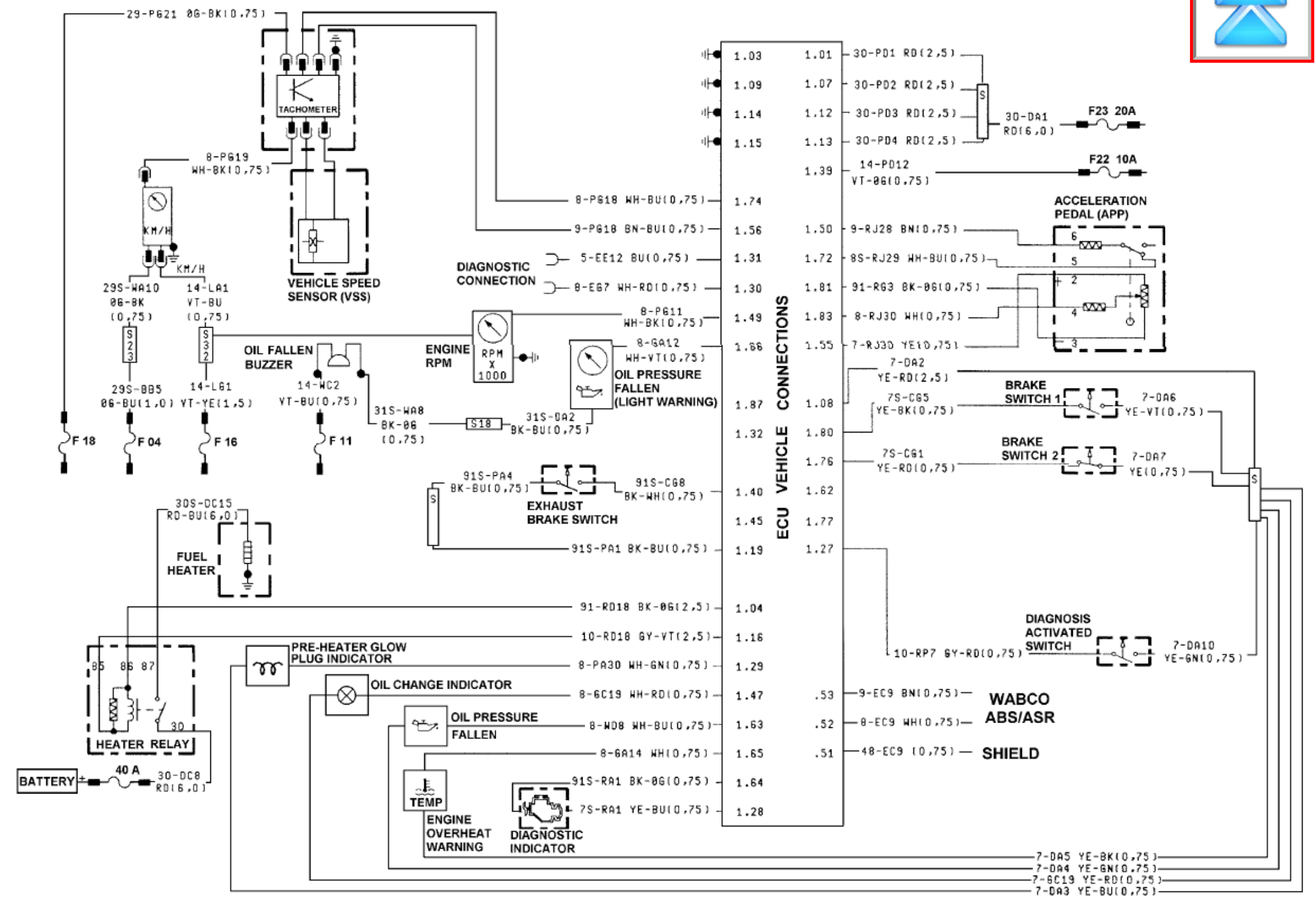
29-PG21 0G-BK(0,75)
TACHOMETER
8-PG19 WH-BK(0,75)
KM/H
KM/H
29S-WA10 0G-BK (0,75)
14-LA1 VT-BU (0,75)
VEHICLE SPEED SENSOR (VSS)
8-PG18 WH-BU(0,75)
9-PG18 BN-BU(0,75)
DIAGNOSTIC CONNECTION
5-EE12 BU(0,75)
8-EG7 WH-RD(0,75)
8-PG11 WH-BK(0,75)
ENGINE RPM
RPM X 1000
8-GA12 WH-VT(0,75)
OIL PRESSURE FALLEN (LIGHT WARNING)
OIL FALLEN BUZZER
14-WC2 VT-BU(0,75)
31S-WA8 BK-0G (0,75)
S18
31S-DA2 BK-BU(0,75)
29S-BB5 0G-BU(1,0)
14-LG1 VT-YE(1,5)
F 18
F 04
F 16
F 11
91S-PA4 BK-BU(0,75)
91S-CG8 BK-WH(0,75)
EXHAUST BRAKE SWITCH
91S-PA1 BK-BU(0,75)
30S-DC15 RD-BU(6,0)
FUEL HEATER
91-RD18 BK-0G(2,5)
10-RD18 GY-VT(2,5)
PRE-HEATER GLOW PLUG INDICATOR
8-PA30 WH-GN(0,75)
OIL CHANGE INDICATOR
8-GC19 WH-RD(0,75)
OIL PRESSURE FALLEN
8-WD8 WH-BU(0,75)
8-GA14 WH(0,75)
TEMP
ENGINE OVERHEAT WARNING
91S-RA1 BK-0G(0,75)
7S-RA1 YE-BU(0,75)
DIAGNOSTIC INDICATOR
85 86 87
30
HEATER RELAY
BATTERY
40 A
30-DC8 RD(6,0)
ECU VEHICLE CONNECTIONS
1.03 1.09 1.14 1.15 1.39 1.74 1.56 1.31 1.30 1.49 1.66 1.87 1.32 1.76 1.40 1.45 1.19 1.04 1.16 1.29 1.47 1.63 1.65 1.64 1.28
1.01 1.07 1.12 1.13 1.50 1.72 1.81 1.83 1.55 1.08 1.80 1.62 1.77 1.27 .53 .52 .51
30-PD1 RD(2,5)
30-PD2 RD(2,5)
30-PD3 RD(2,5)
30-PD4 RD(2,5)
30-DA1 RD(6,0)
F23 20A
14-PD12 VT-0G(0,75)
F22 10A
ACCELERATION PEDAL (APP)
9-RJ28 BN(0,75)
8S-RJ29 WH-BU(0,75)
91-RG3 BK-0G(0,75)
8-RJ30 WH(0,75)
7-RJ30 YE(0,75)
7-DA2 YE-RD(2,5)
BRAKE SWITCH 1
7S-CG5 YE-BK(0,75)
7-DA6 YE-VT(0,75)
BRAKE SWITCH 2
7S-CG1 YE-RD(0,75)
7-DA7 YE(0,75)
DIAGNOSIS ACTIVATED SWITCH
10-RP7 GY-RD(0,75)
7-DA10 YE-GN(0,75)
WABCO ABS/ASR
9-EC9 BN(0,75)
8-EC9 WH(0,75)
48-EC9 (0,75)
SHIELD
7-DA5 YE-BK(0,75)
7-DA4 YE-GN(0,75)
7-GC19 YE-RD(0,75)
7-DA3 YE-BU(0,75)

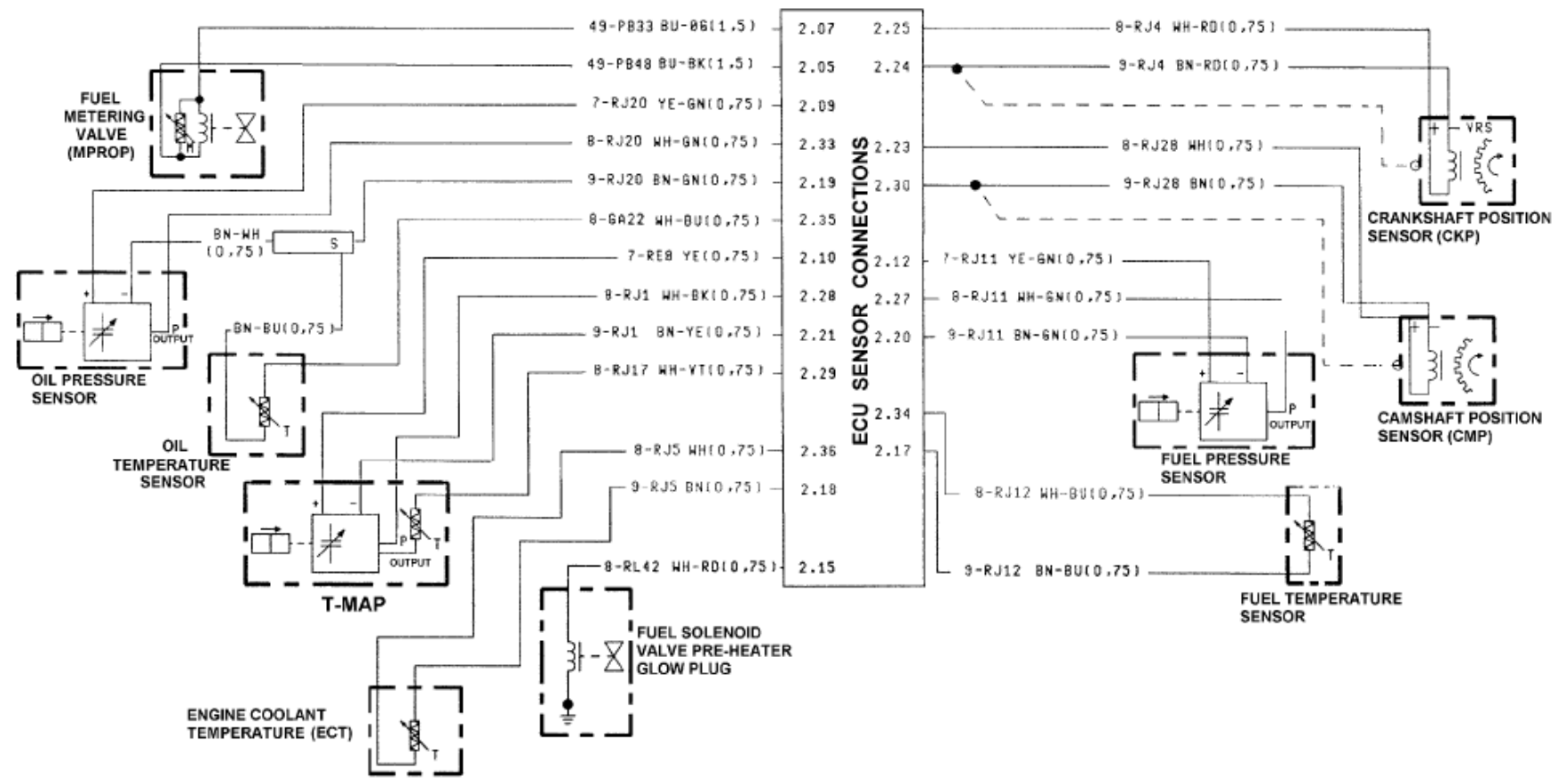
FUEL METERING VALVE (MPROP)
49-PB33 BU-0G(1,5)
49-PB48 BU-BK(1,5)
7-RJ20 YE-GN(0,75)
8-RJ20 WH-GN(0,75)
9-RJ20 BN-GN(0,75)
8-GA22 WH-BU(0,75)
7-RE8 YE(0,75)
8-RJ1 WH-BK(0,75)
9-RJ1 BN-YE(0,75)
8-RJ17 WH-VT(0,75)
8-RJ5 WH(0,75)
9-RJ5 BN(0,75)
8-RL42 WH-RD(0,75)
BN-WH (0,75)
BN-BU(0,75)
OIL PRESSURE SENSOR
OIL TEMPERATURE SENSOR
T-MAP
ENGINE COOLANT TEMPERATURE (ECT)
FUEL SOLENOID VALVE PRE-HEATER GLOW PLUG
ECU SENSOR CONNECTIONS
2.07 2.05 2.09 2.33 2.19 2.35 2.10 2.28 2.21 2.29 2.36 2.18 2.15
2.25 2.24 2.23 2.30 2.12 2.27 2.20 2.34 2.17
8-RJ4 WH-RD(0,75)
9-RJ4 BN-RD(0,75)
8-RJ28 WH(0,75)
9-RJ28 BN(0,75)
7-RJ11 YE-GN(0,75)
8-RJ11 WH-GN(0,75)
9-RJ11 BN-GN(0,75)
8-RJ12 WH-BU(0,75)
9-RJ12 BN-BU(0,75)
VRS
CRANKSHAFT POSITION SENSOR (CKP)
CAMSHAFT POSITION SENSOR (CMP)
FUEL PRESSURE SENSOR
FUEL TEMPERATURE SENSOR

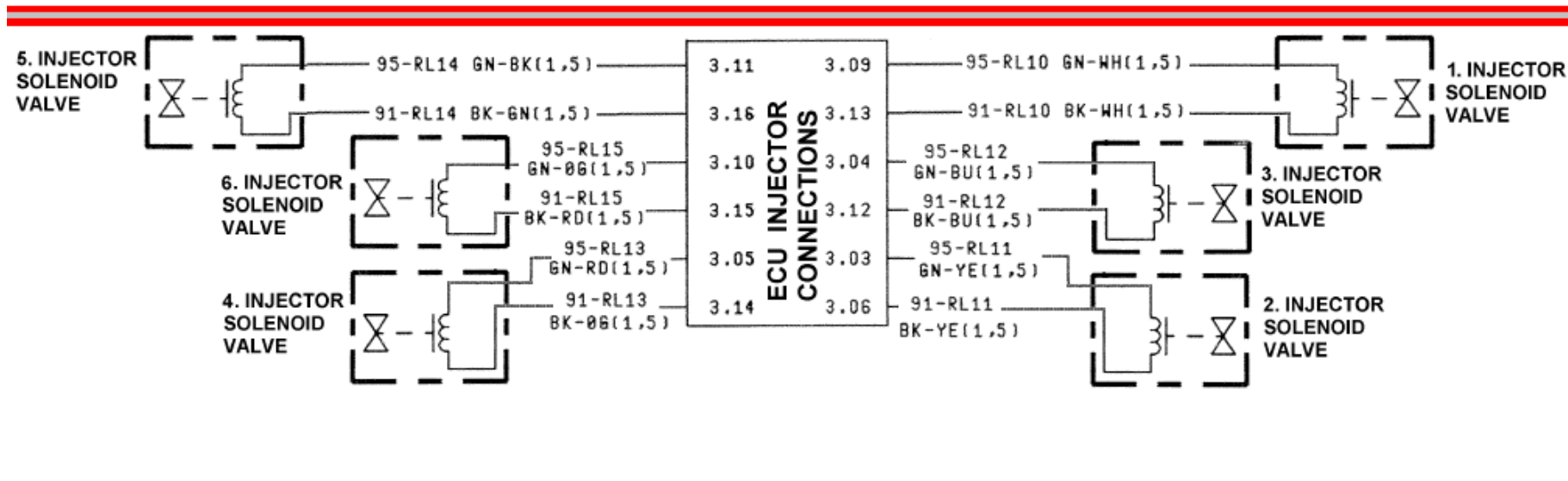
5. INJECTOR SOLENOID VALVE
95-RL14 GN-BK(1,5)
91-RL14 BK-GN(1,5)
6. INJECTOR SOLENOID VALVE
95-RL15 GN-0G(1,5)
91-RL15 BK-RD(1,5)
4. INJECTOR SOLENOID VALVE
95-RL13 GN-RD(1,5)
91-RL13 BK-0G(1,5)
ECU INJECTOR CONNECTIONS
3.11 3.16 3.10 3.15 3.05 3.14
3.09 3.13 3.04 3.12 3.03 3.06
95-RL10 GN-WH(1,5)
91-RL10 BK-WH(1,5)
1. INJECTOR SOLENOID VALVE
95-RL12 GN-BU(1,5)
91-RL12 BK-BU(1,5)
3. INJECTOR SOLENOID VALVE
95-RL11 GN-YE(1,5)
91-RL11 BK-YE(1,5)
2. INJECTOR SOLENOID VALVE